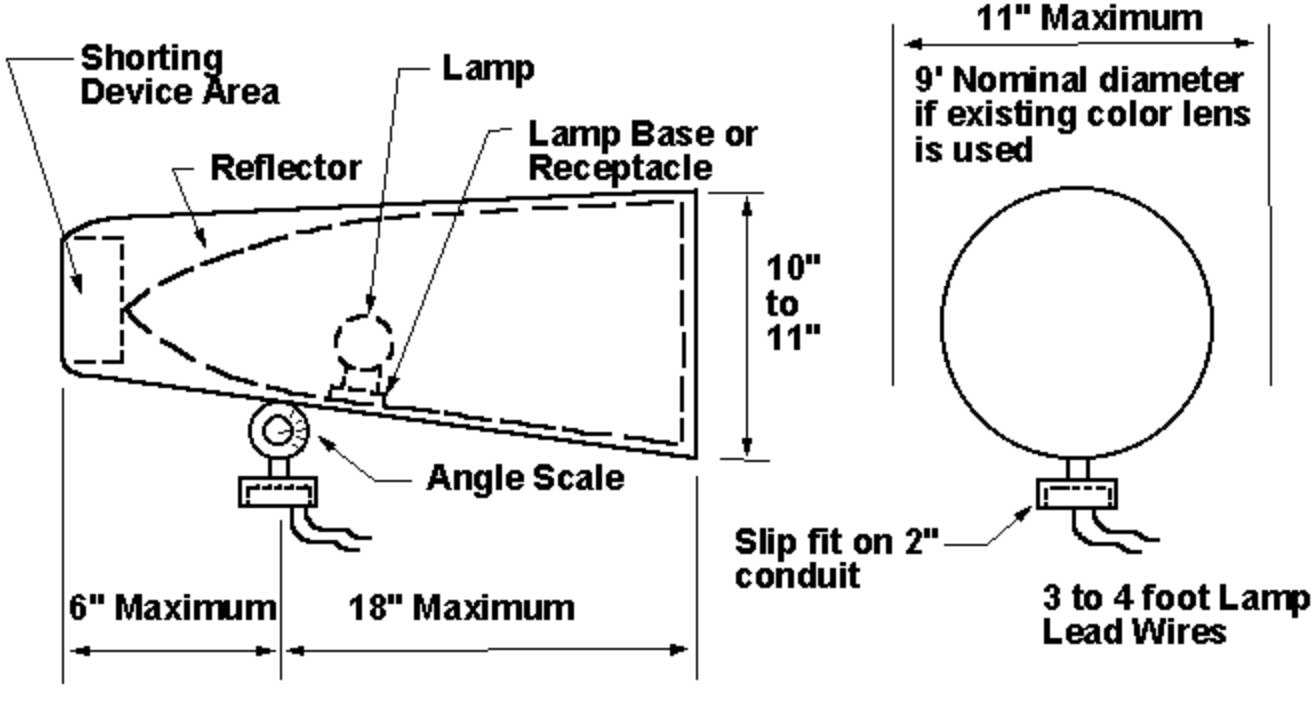

LIGHT SOURCE TO REPLACE PAR56 LAMPS

CONCEPT SKETCH