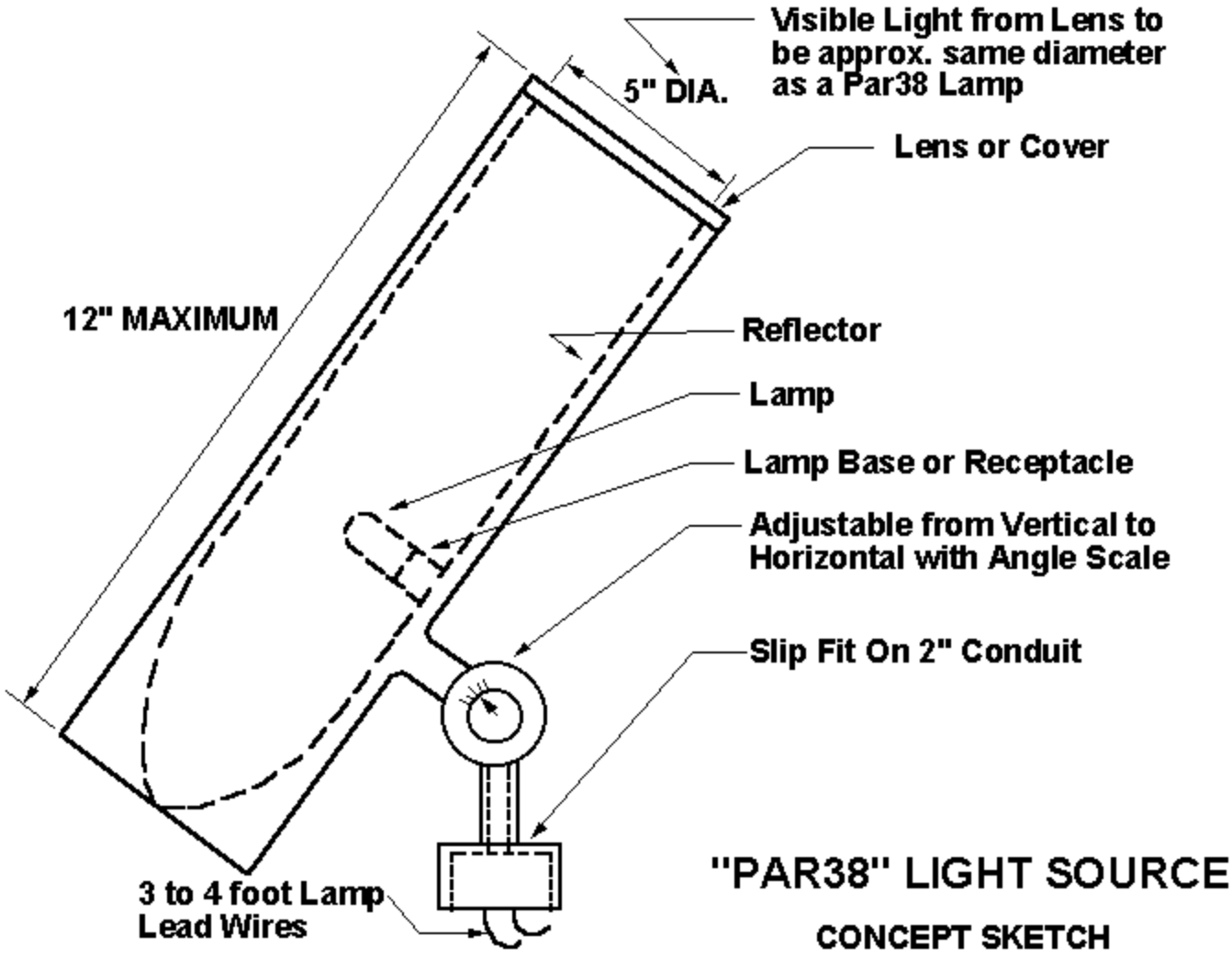

"PAR38" LIGHT SOURCE

CONCEPT SKETCH